Installing Adapters: 40S&W, 45ACP, 45GAP, 357SIG.

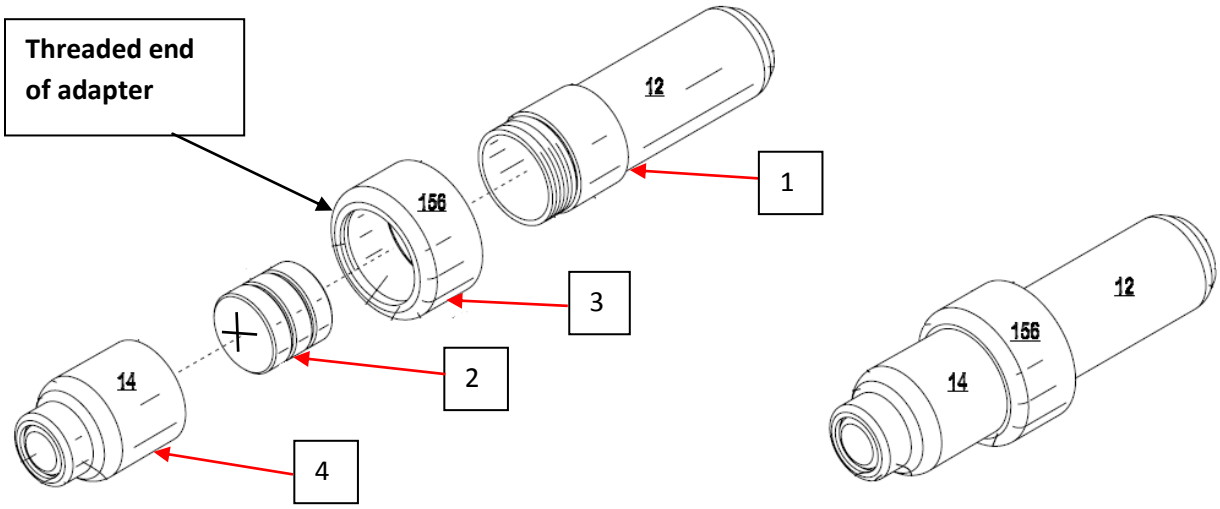

A. Installation:

NOTE: Only the 9mm action cap will work with the adapters! All types of adapters (including revolver and shotgun adapters) use the 9mm action cap.

1. Remove the 9mm action cap (5) from the laser assembly (1).
2. Place the adapter (3) with the **threaded end up**, (as shown in the picture) on the threaded end of the laser assembly.

Caution: Installing the adapter upside down will damage the threads.

3. Carefully engage the thread to the laser assembly (1) and thread the adapter (3) down until it stops.

Caution: Do not use force.

4. Insert the battery pack (2) according to the drawing (do not remove the shrink wrap from the battery).
5. Take the 9mm action cap only (4) and install it on the laser assembly (1) with the battery installed.
6. The 9mm action cap (4) will thread down to the adapter and hold it in place.
7. Verify the threading is fully closed and that there is no gap.
8. Once the adaptor is installed, the SureStrike is used in the same manner as a 9mm SureStrike and will require the use of the safety pipe and nut.

B. Disassembly: Reverse the assembly procedure.